ECO NO.	DATE	REV.	REVISION RECORD	AUTH.	DR.BY
5703	3-22-04	A	REMOVE #42491 (4), ADD #42490 (4)		BM

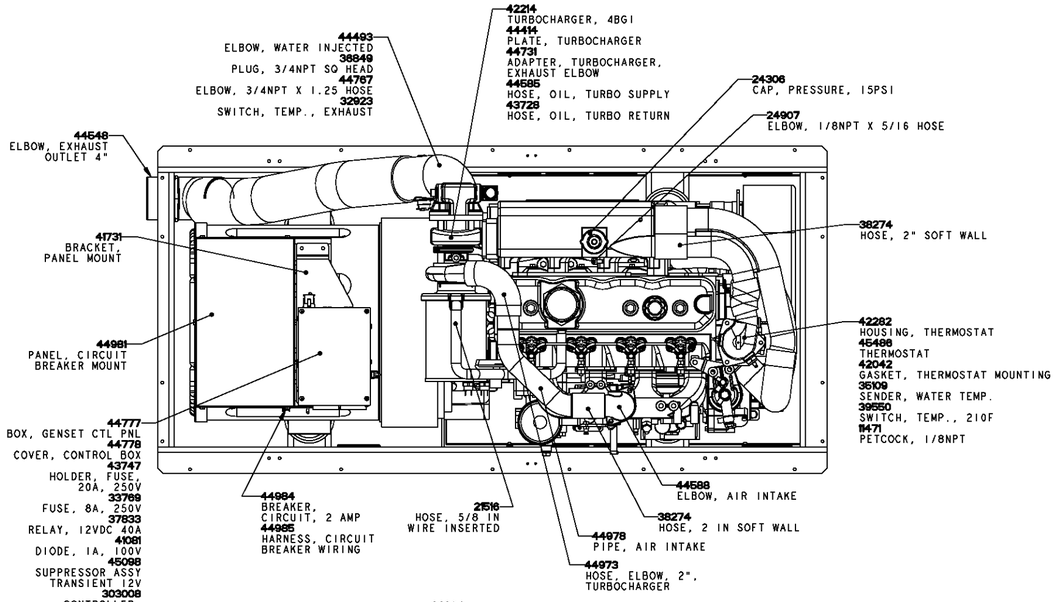

FAST MOVING PARTS					
39139	ALTERNATOR, 12V 50A	36192	HOURMETER, 12V	48177	SPARE PARTS KIT A
38530	ALTERNATOR, 24V 42A	42159	HOURMETER, 24V	48178	SPARE PARTS KIT B-NATURALLY ASP.
44044	BELT, GUARD	48139	INJECTOR - NATURALLY ASP.	48184	SPARE PARTS KIT B-TURBOCHARGED
44385	BELT, WATER PUMP-ALTERNATOR	48144	INJECTOR - TURBOCHARGED	303007	SOLENOID, FUEL CONTROL 12V
24306	CAP, PRESSURE	42490	ISOLATORS	39746	SOLENOID, FUEL CONTROL 24V
20946	CIRCUIT BREAKER, 10A 24VDC	45140	MANUAL, OPERATOR	45561	SOLENOID, FUEL STOP 12V
38563	CIRCUIT BREAKER, 10A 12VDC	36650	OIL COOLER	45562	SOLENOID, FUEL STOP 24V
24683	CIRCUIT BREAKER, 20A 12VDC	35110	OIL PRESSURE METER 12V	24639	SOLENOID, PREHEAT 12V
43577	DIPSTICK	42157	OIL PRESSURE METER 24V	22249	SOLENOID, PREHEAT 24V
33259	EMERGENCY STOP SWITCH	24132	OIL PRESSURE SENDER 12V	43472	STARTER MOTOR 12V
32923	EXHAUST TEMPERATURE SWITCH	42161	OIL PRESSURE SENDER 24V	39417	STARTER MOTOR 24V
43930	FILTER, AIR	37323	OIL PRESSURE SWITCH 5#	24732	SWITCH, PREHEAT & START
46140	FILTER, FUEL OIL	11552	OIL PRESSURE SWITCH 10#	24731	SWITCH, STOP
44995	FILTER, LUBE OIL	13758	PAINT, RED AEROSOL	39826	TACHOMETER, ADMIRAL PANEL
33769	FUSE, 8 AMP	42307	PAINT, WHITE AEROSOL	24977	TANK, COOLANT RECOVERY
48176	GASKET SET, COMPLETE	36842	PANEL KIT, ADMIRAL 12V	45486	THERMOSTAT
48175	GASKET SET, UPPER	46637	PANEL KIT, ADMIRAL 24V	42042	THERMOSTAT MOUNTING GASKET
47353	GASKET, HEAD	36539	PANEL, GENSET CONTROL 12V	47351	VALVE COVER GASKET
45444	GASKET, OIL PAN	42162	PANEL, GENSET CONTROL 24V	42338	VOLTAGE REGULATOR
48130	GLOWPLUG, 12V	44336	PANEL, REMOTE START/STOP 15 PIN	35111	VOLTMETER 12V
45124	GLOWPLUG, 24V	47354	PUMP, FRESH WATER	42156	VOLTMETER 24V
38557	HARNESS 15 FT. EXT 4 PIN	47323	PUMP, IMPELLER KIT	44495	WATER INJ. EXHAUS ELBOW NAT. ASP.
30760	HARNESS 15 FT. EXT 8 PIN	47352	PUMP, MOUNTING GASKET	44493	WATER INJ. EXHAUST ELBOW TURBO
44347	HARNESS EXT 15 PIN, 15'-30'	44183	PUMP, MOUNTING O-RING	35108	WATER TEMPERATURE METER 12V
44791	HEAT EXCHANGER	47324	PUMP, REPAIR KIT	42158	WATER TEMPERATURE METER 24V
42063	HEAT EXCHANGER END CAP	43514	PUMP, SEA WATER	35109	WATER TEMPERATURE SENDER
42054	HEAT EXCHANGER GASKET	44995	REMOTE LUBE OIL FILTER	39550	WATER TEMPERATURE SWITCH
44131	HEAT EXCHANGER O-RING			44782	WIRING HARNESS
47305	HOSE KIT, WATER			11885	ZINC
ITEMS NOT SHOWN					
44782	HARNESS, GENSET 4-6BGI				

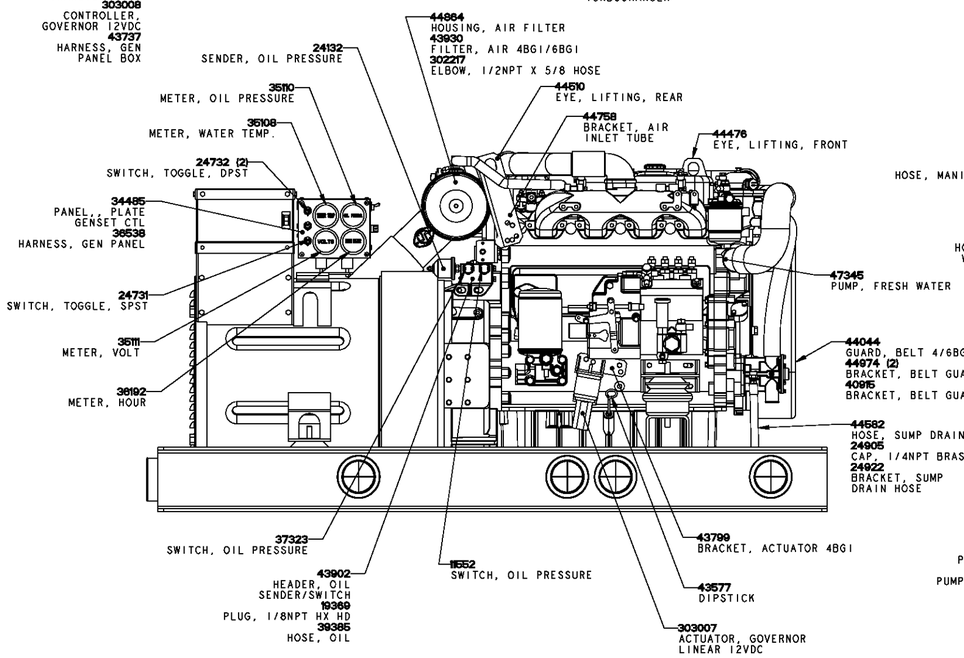

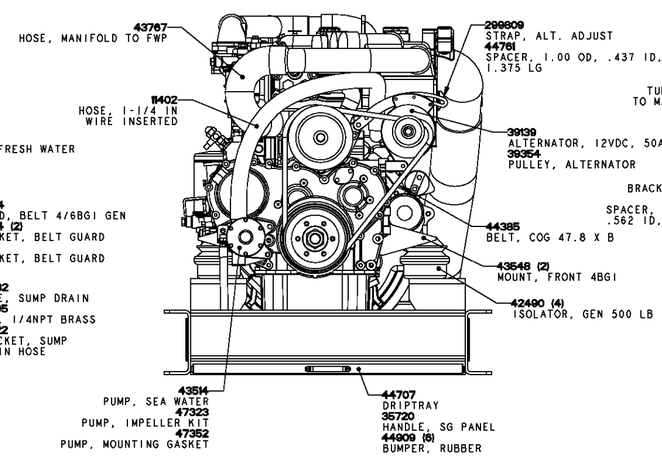

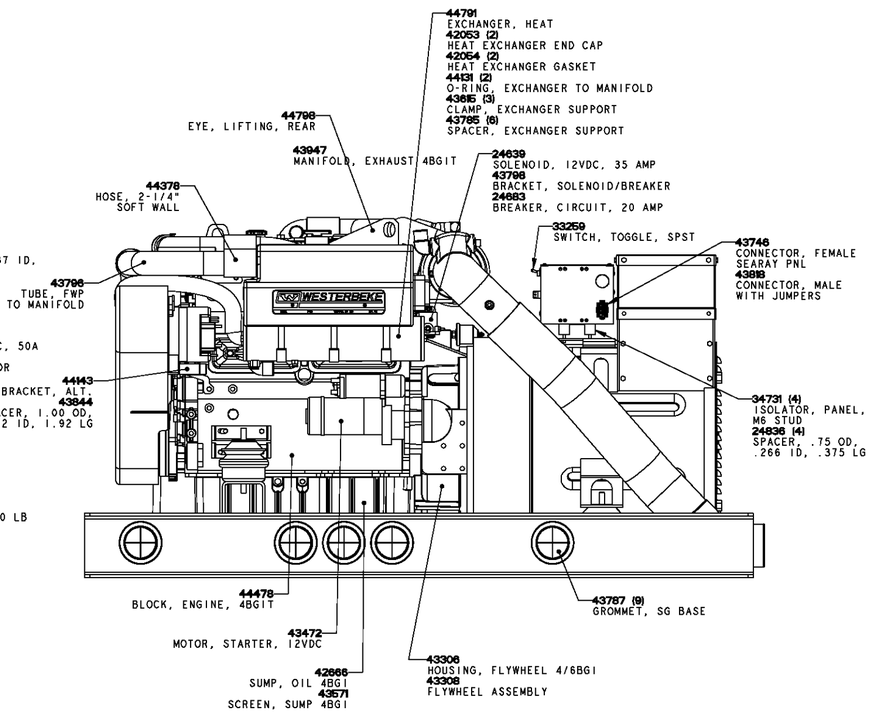

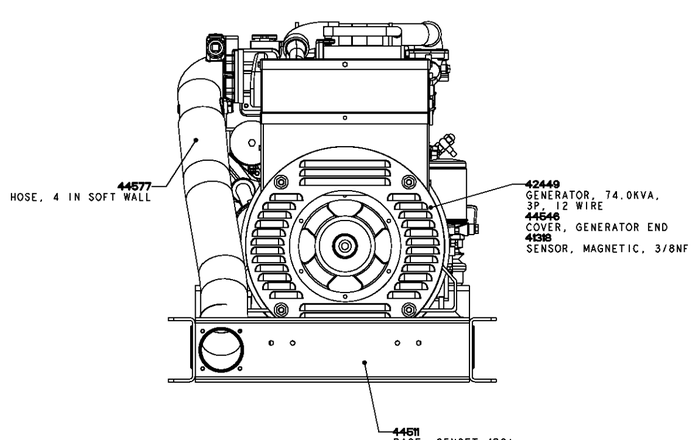

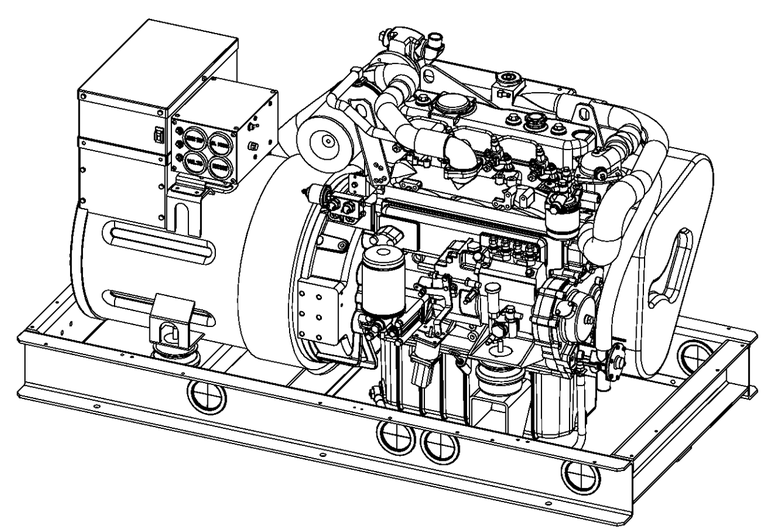

TOLERANCES (UNLESS OTHERWISE NOTED)	WESTERBEKE CORPORATION TAUNTON, MA. 02780			
INCHES .XX ±.02 .XXX ±.005 CAST ±.03 ANGLES: ±° FINISH MILLIMETERS X. ± .XX ±	TITLE PARTS LIST - 55.0 BED			
	DRAWN BY BM	DATE 8/Jun/03	MATERIAL: --- --- ---	
DIMENSIONS INCHES MILLIMETERS (WHEN APPLICABLE)	APPROVED BY	DATE		
	SCALE 0.188	SIZE E	DRAWING NUMBER 48519	REV. A
	SHT. 1 OF 1			